TDODHS530M

5MP Starlight HDCVI IR Dome Camera

· Max 25 fps@5MP (16:9 video output)

· CVI/CVBS/AHD/TVI switchable

· 2.7-12 mm motorized lens

· Max. IR length 30 m, Smart IR

· IP67, IK10, DC12V

System Overview

Experience 5MP full HD video and the simplicity of using existing cabling infrastructure with HDCVI. The Lite series 5MP HDCVI camera features a compact design and offers a high quality image at a friendly price. It offers various motorized/fixed lens models with a multi-language OSD and HD/SD switchable output. Its structural flexibility and high cost-performance makes the camera an ideal choice for SMB solutions.

Functions

4 Signals over 1 Coaxial Cable

HDCVI technology supports 4 signals to be transmitted over 1 coaxial cable simultaneously, i.e. video, audio*, data and power. Dual-way data transmission allows the HDCVI camera to interact with the XVR, such as sending control signal or triggering alarm. Moreover, HDCVI technology supports PoC for construction flexibility.

* Audio input is available for some models of HDCVI cameras.

Long Distance Transmission

HDCVI technology guarantees real-time transmission at long distance without any loss. It supports up to 700 m for 5MP HD video via coaxial cable, and up to 300 m via UTP cable.*

*Actual results verified by real-scene testing in Toughdog's test laboratory.

Simplicity

HDCVI technology inherits the born feature of simplicity from traditional analog surveillance system, making itself a best choice for investment protection. HDCVI system can seamlessly upgrade the traditional analog system without replacing existing coaxial cabling. The plug and play approach enables full HD video surveillance without the hassle of configuring a network.

Smart IR

The camera is designed with IR LED illumination for best lowlight performance. Smart IR is a technology to ensure brightness uniformity in B/W image under low illumination. TOUGHDOG's unique Smart IR adjusts to the intensity of camera's infrared LEDs to compensate for the distance of an object, and prevents IR LEDs from overexposing images as the object come closer to the camera.

Multi-formats

The camera supports multiple video formats including HDCVI, CVBS and other two common HD analog formats in the market. The four formats can be switched over through OSD menu. This feature makes the camera to be compatible with most end users' existing HD/SD DVRs.

Multi-language OSD

OSD menu provides multiple image adjustments and function settings to meet the requirements of different monitoring scenes. The OSD menu includes configurations such as backlight mode, day/night, white balance, privacy mask and motion detect. The camera supports 11 languages for OSD menu, namely, Chinese, English, French, German, Spanish, Portuguese, Italian, Japanese, Korean, Russian and Polish.

Protection

The camera's outstanding reliability is unsurpassed due to its rugged design. The camera is protected against water and dust with IP67 ranking, making it suitable for indoor or outdoor environments.
With working temperature range of –30 °C to +60 °C (–22 °F to +140 °F), the camera is designed for extreme temperature environments.
Supporting ±30% input voltage tolerance, this camera suits even the most unstable power supply conditions. Its 4kV lightning rating provides protection against the camera and its structure from the effects of lightning.

TDODHS530M

Technical Specification

Camera

Image Sensor	1/2.7 inch CMOS
Max. Resolution	2880 (H) × 1620 (V)
Pixel	5MP
Scanning System	Progressive
Electronic Shutter Speed	PAL: 1/25 s–1/100000 s NTSC: 1/30 s–1/100000 s
S/N Ratio	> 65 dB
Min. Illumination	0.01 Lux/F1.6, 30IRE, 0 Lux IR on
Illumination Distance	30 m (98.4 ft)
Illuminator On/Off Control	Auto; manual
Illuminator Number	2
Pan/Tilt/Rotation Range	Pan: 0°–355° Tilt: 0°–75° Rotation: 0°–355°

Lens

Lens Type	Motorized vari-focal
Auto Focus	N/A
Mount Type	ϕ14
Focal Length	2.7 mm–12 mm
Max. Aperture	F1.6
Field of View	Diagonal: 39°–130° Horizontal: 34°–107° Vertical: 19°–55°
Iris Type	Fixed iris
Close Focus Distance	0.5 m (1.64 ft)

		Detect	Observe	Recognize	Identify
DORI Distance	2.7 mm	69 m (226.37 ft)	27.6 m (90.55 ft)	13.8 m (45.27 ft)	6.9 m (22.63 ft)
	12 mm	191.6 m (628.6 ft)	76.64 m (251.44 ft)	38.32 m (125.72 ft)	19.16 m (62.86 ft)

Video

Frame Rate	CVI: PAL: 5M@25 fps; 4M@25 fps; 1080P@25 fps NTSC: 5M@25 fps; 4M@30 fps; 1080P@30 fps AHD: PAL: 4M@25 fps; NTSC: 4M@30 fps TVI: PAL: 4M@25 fps; NTSC: 4M@30 fps CVBS: PAL: 960H; NTSC: 960H
Resolution	5M (2880 × 1620); 4M (2560 × 1440); 1080p (1920 × 1080); 960H (960 × 576/960 × 480)
Day/Night	Auto switch by ICR
BLC	BLC/HLC/DWDR
WDR	DWDR
White Balance	Auto; manual
Gain Control	Auto; manual
Noise Reduction	2D NR
Smart IR	Yes
Mirror	Off/On
Privacy Masking	Off/On (8 area, rectangle)

Certifications

Certifications	CE (EN55032:2015, EN 61000-3-2:2014, EN 61000-3-3:2013, EN55024:2010+A1:2015, EN 55035:2017, EN50130-4:2011+A1:2014, EN 62368-1:2014+A11:2017) FCC (CFR 47 FCC Part 15 subpartB, ANSI C63.4-2014) UL (UL60950-1+CAN/CSA C22.2 No.60950-1)

Port

Video Output	Video output choices of CVI/TVI/AHD/CVBS by one BNC port

Power

Power Supply	DC 12V ±30%
Power Consumption	Max 5.5W (12V DC, IR on)

Environment

Operating Temperature	–30°C to +60°C (–22°F to +140°F); <95% (non-condensation)
Storage Temperature	–30°C to +60°C (–22°F to +140°F); <95% (non-condensation)
Protection Grade	IP67, IK10

Structure

Casing	Metal throughout the whole casing
Camera Dimensions	ϕ122 mm × 88.9 mm (ϕ4.8" × 3.5")
Net Weight	0.47 kg (1.04 lb)
Gross Weight	0.62 kg (1.34 lb)

Installation

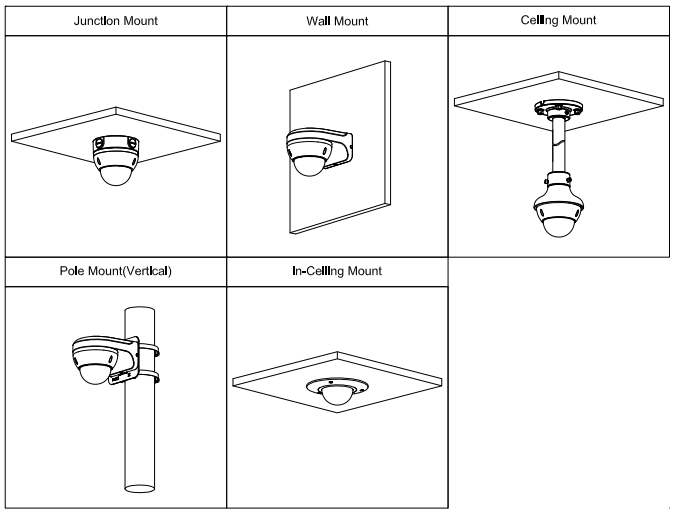

Accessories

Optional:

PFA123
IP66 Junction Box

PFA137
Junction Box

PFB203W
Wall Mount Bracket
(For use alone or with PFA152-E)

PFA152-E
Pole Mount Bracket
(For use with PFB203W)

PFB220C
Ceiling Mount Bracket
(For use with PFA106)

PFA106
Mount Adapter
(For use with PFB220C)

PFB200C
In-ceiling Mount Bracket

PFM800-4K
Passive HDCVI Balun

PFM321D
12V 1A Power Adapter

PFM820
(Only 1080P and below are available)
UTC Controller
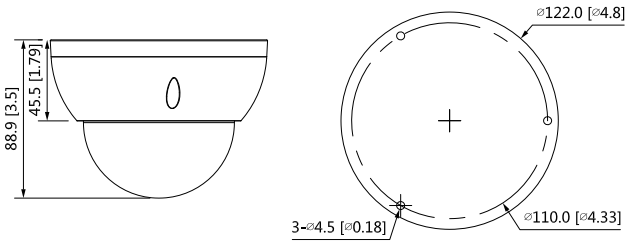
Dimensions (mm [inch])